Unihopper®

Installation Instruction For MONA WB2441S

ⓐ X1	ⓑ X1	ⓒ X1	ⓓ X1	ⓔ X1	ⓕ X1	ⓖ X2	ⓗ X2	ⓘ X1	
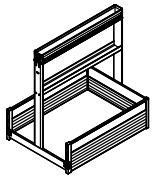	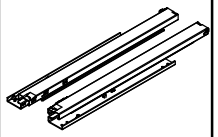	ST3.8×13 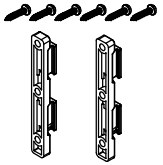	ST3.5×10 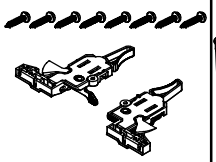	W:400/450 W:300/350 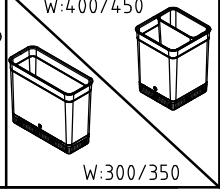	W:400/450 W:300/350 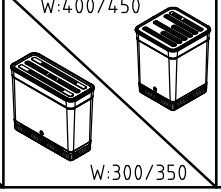	W:400/450 W:300/350 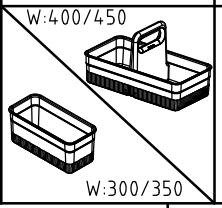	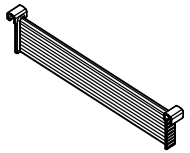	ST4×16 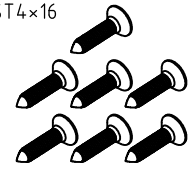	

1

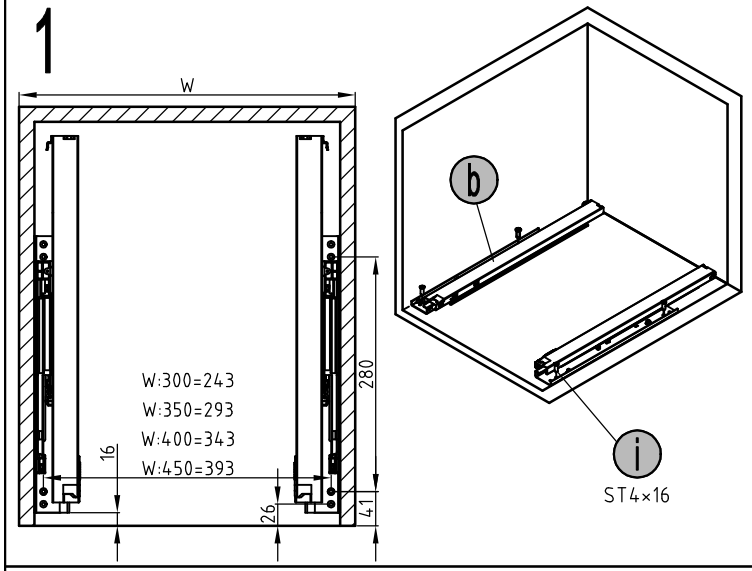

2

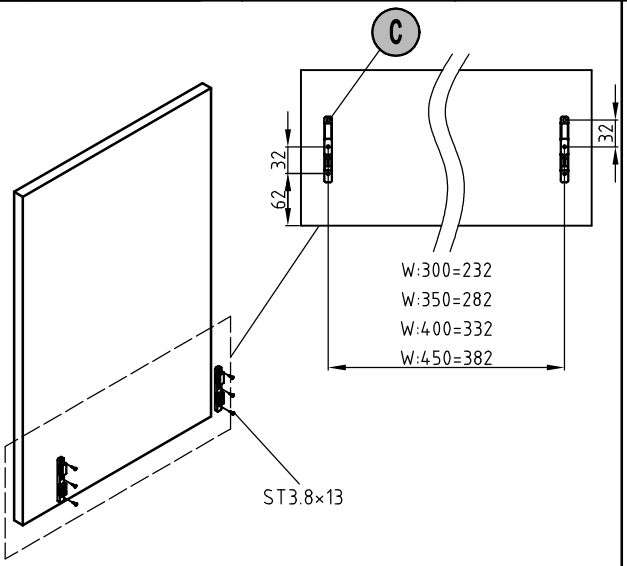

3

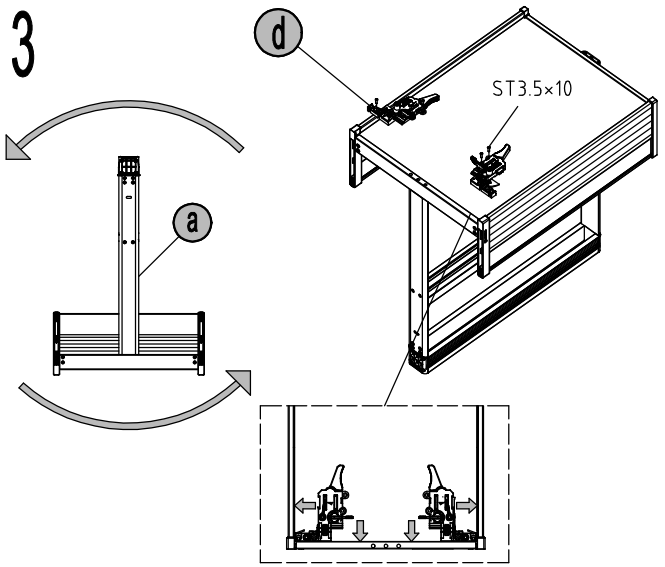

4

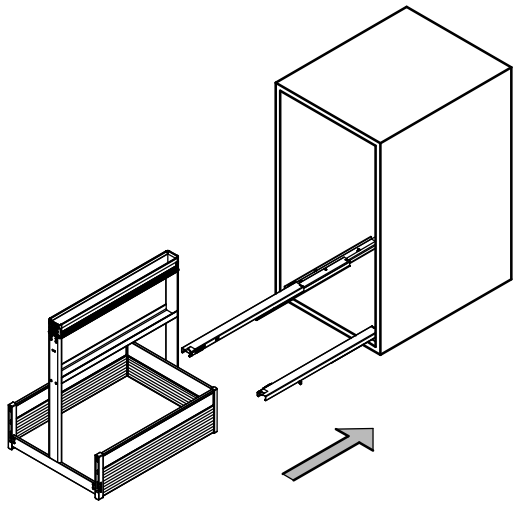

5

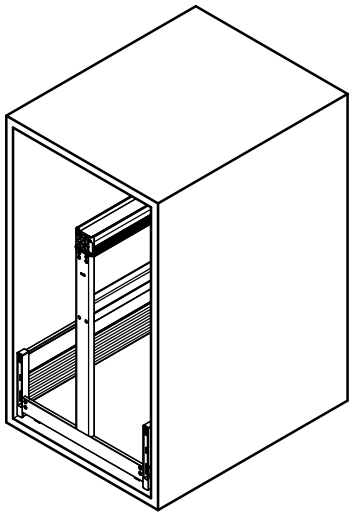

6

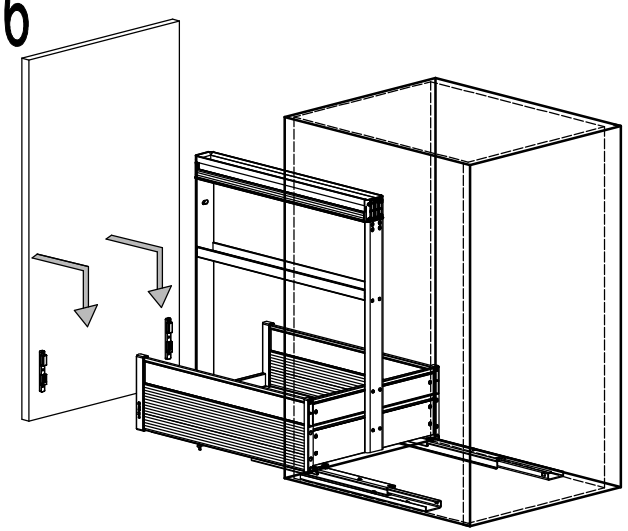

Unihopper®

Installation Instruction For MONA WB2441S

7

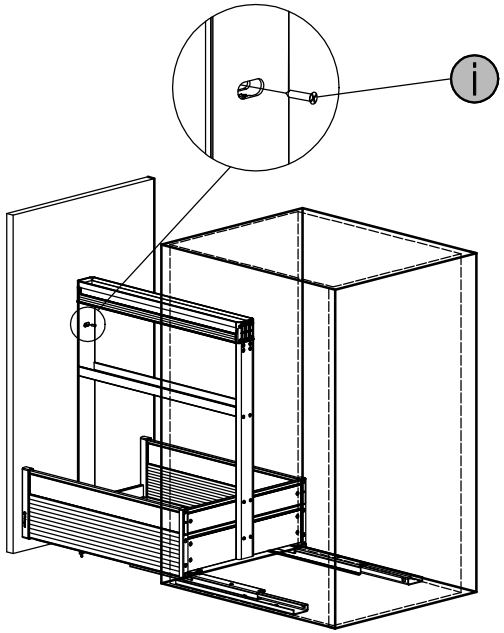

8

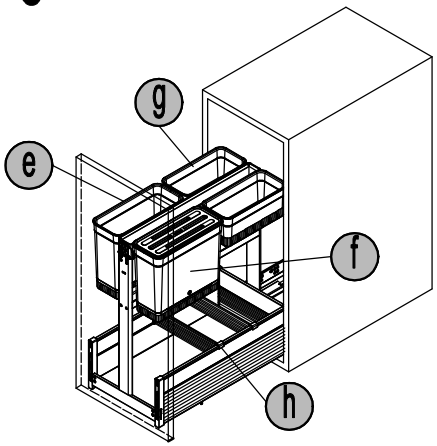

W300/W350

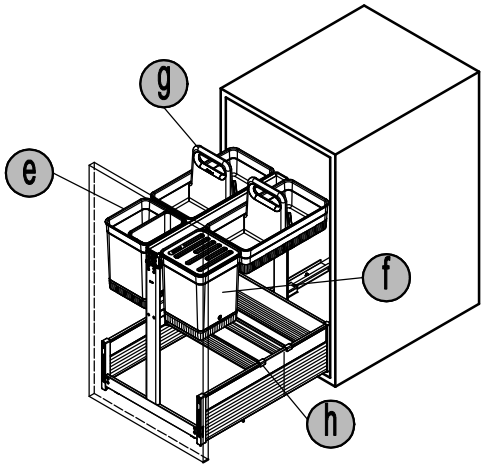

W400/W450

